scaffolding connector hot dip galvanized steel 48.3mm tube fitting coupler for ringlock scaffolding system BYTHAI

Our Product Introduction

Basic Information

- Place of Origin: China
- Brand Name: Bythai
- Certification: SGS
- Model Number: SCA-COU-001
- Minimum Order Quantity: 1000
- Price: $5-$15
- Packaging Details: In bundles
- Delivery Time: 10-15
- Payment Terms: L/C, T/T

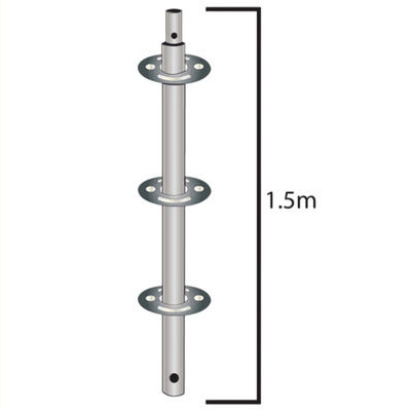

Product Specification

- Scaffoldwidth: Flexible, Based On Modular Components
- Scaffoldheight: Unlimited (customizable)
- Tube Thickness: 3.25mm
- Assembly Type: Quick And Easy
- Connection Type: Wedge Pin
- Usage: Construction
- Durability: High
- Assemblytime: Fast Assembly And Dismantling
- Design Style: Industrial
- Rosette: Q235 Steel
- Ledgertype: Ringlock Ledgers With Rosette Connection
- Loadcapacity: Up To 200 KN Per Node
- Application Scenarios: Architecture
- Materials: Q195, Q235, Q355B
- Weight: ≤30kg/m2

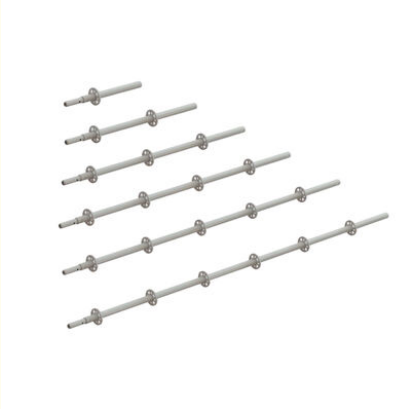

More Images

for more products please visit us on bythaiscaff.com

Product Description

Product Description

The High-Strength Wedge Pin is a crucial component for securing connections within the ringlock scaffolding system. Made from durable steel, this wedge pin ensures tight and reliable joints, enhancing the overall stability and safety of the scaffolding structure. The yellow finish not only adds a distinctive look but also improves visibility, reducing the risk of accidental dislodgement. Its robust construction and precise design make it easy to install and remove, ensuring efficient assembly and disassembly of the scaffolding system. This wedge pin is an essential accessory for any professional scaffolding setup, providing the necessary security and reliability for safe construction operations.

Specification:

Ringlock Vertical Standard

Specification	Thickness(mm)	Length(mm)	Surface	Weight(kgs)
M48	3.2	500	HDG	2.56
M48	3.2	1000	HDG	4.99
M48	3.2	1500	HDG	7.45
M48	3.2	2000	HDG	9.95
M48	3.2	2500	HDG	12.43
M48	3.2	3000	HDG	14.87

Details Pictures:

for more products please visit us on bythaiscaff.com

Certificates:

FAQ:

Q: What types of scaffolding systems do you offer?
A: We offer a variety of scaffolding systems, including ring lock, frame, prop, tube & coupler systems, steel and aluminum planks, and various scaffolding accessories.
Q: How does your quality control process ensure the safety and reliability of your scaffolding products?
A: Our strict quality control process includes thorough inspections, material testing, and adherence to international safety standards to ensure our scaffolding products are safe and reliable.
Q: Can you provide customized scaffolding solutions to meet specific project requirements?
A: Yes, we offer customized scaffolding solutions tailored to meet the unique needs of your project, ensuring optimal performance and safety.
Q: What is the typical lead time for orders, and how do you handle urgent requests?
A: Our standard lead time varies depending on the order size and complexity, but we prioritize urgent requests to ensure timely delivery without compromising quality.
Q: Do you offer support and guidance for scaffolding assembly and installation?
A: Yes, we provide comprehensive support, including detailed assembly instructions and technical assistance to ensure proper installation and safe use of our scaffolding systems.
Q: What are the key advantages of using your aluminum ringlock system?
A: Our aluminum ringlock system offers several advantages, including lightweight design, easy assembly, high load capacity, durability, and corrosion resistance, making it ideal for various construction projects.
Q: How do your prices compare to other scaffolding suppliers?
A: We offer competitive factory prices while maintaining high-quality standards, providing cost-effective solutions that deliver excellent value for your investment.
Q: What certifications and standards do your scaffolding products meet?
A: Our scaffolding products meet international certifications and standards, including OSHA, EN, and ISO, ensuring they comply with the highest safety and quality requirements.
Q: Can you provide references or case studies from past projects?
A: Yes, we can provide references and case studies showcasing our successful projects and satisfied customers to demonstrate our expertise and reliability.
Q: What is the process for placing an order and what payment options do you accept?
A: Placing an order is simple: contact our sales team with your requirements, receive a detailed quote, and finalize the order. We accept various payment options, including TT, letters of credit, and other secure methods.

Bythai Scaffolding Co.,Ltd

15084911343 info@bythaiscaffolding.com bythaiscaff.com

Room 702.TianMei Building,No.676 Shaoshan Road,Yuhua,Changsha, Hunan, China